WW PROMOTIONS LLC

MEMBERSHIP & CLASS RULES

P O Box 242

Mtn Home AR 72654

(870) 404-3852

wwpromosllc@gmail.com

WW PROMOTIONS

TABLE OF CONTENTS

1. CONTEST RULES.....3

2. SAFETY RULES.....6

3. GENERAL TRUCK RULES.....7

4. CLASS RULES.....9

a. 6200 DOT 2WD.....9
b. 6200 PRO STOCK 4WD.....10
c. 6200 PRO STREET.....11
d. 6200 SUPER STREET.....12
e. HOT STOCK.....14
f. PRO STOCK 2WD.....16
g. SMALL BLOCK SUPER STOCK 4WD..17
h. STOCK 2WD..... 18
i. DIESEL 4WD.....19
j. HOMETOWN CLASS – GAS.....22

WW PROMOTIONS

CONTEST RULES

1. Any vehicle that hooks to the sled must be registered as a member of W/W Promotions LLC.
2. If more than one vehicle is being driven by a member, each vehicle is required to register as a separate member.
3. A vehicle may only enter one (1) class per event.
4. All members and drivers must follow all rules and requirements as set forth herein.
5. All members must complete all membership documentation and pay the membership fee prior to being allowed to enter the competition. Membership fee is $75 per truck.
6. No person will be allowed to drive unless a Safety Certification Form has been completed for the current calendar year and they agree to follow the rules and requirements set forth herein.
7. Regarding the points competition, points will follow the truck, NOT the driver.
8. If a vehicle attempts to pull and is found to be against the rules and requirements set forth herein, whether before, during, or after the pull, that driver's pull will be considered an exhibition pull and any earned points or prizes will be cancelled.
9. Tech checks will be performed at any time, for any reason, by W/W Promotions employees. This is not considered a Protest. Any refusal to permit this will be considered acknowledgment of an illegal vehicle and the driver AND the vehicle will be suspended for 1 year. Transfer of vehicle ownership does not release the suspension.
10. If a tech check finds a vehicle does not conform to the requirements, the vehicle will be required to either step up to the next class or take it home until it meets requirements.
11. Trucks need to be signed in and hook fee paid at least 30 minutes before the scheduled start time of the pull. Hook fee is $20, but may be changed as determined by management.
12. Class line up will rotate each pull and will be posted on W/W Promotions Facebook page prior to the event.
13. Each truck will draw a number at the time of registration. Pulling lineups for each class will be posted once registration ends.
14. If you are unable to register in person, you may call to request a number to be drawn for you by a W/W Promotions employee. However, once this is done, you are responsible to pay the hook fee, even if you end up not making it to the pull.

W/W PROMOTIONS

15. Drivers are responsible for knowing their pulling order. Vehicles should be in line, weighed and prepared to pull prior to their turn. Any delays greater than 3 minutes will forfeit the vehicle's turn, with the exception of mechanical issues.

16. In the case of mechanical issues, the driver must notify track officials and will be allowed to leave the track to make repairs. However, the vehicle must be ready and in line to pull once the final vehicle in the class has pulled or their turn will be forfeited.

17. Once vehicles are weighed and teched, they should not be left unattended.

18. All sanctioned pulls will, at a minimum, have a dirt track at least 200 ft in length and 20 ft in width. The track will be maintained throughout the event to attempt to ensure consistent pulling conditions.

19. Pulls will be measured by either laser or Agtronics 9000 equipment.

20. Winners will be determined based on the furthest distance before they are stopped.

21. Need for reweighting of the sled will be determined by WW Promotions management. Any vehicles that have already pulled prior to reweighting will pull again, if mechanically possible. If the vehicle cannot re-pull, they will forfeit their turn.

22. If a vehicle does not take off upon first attempt or it does not make it to the 100 ft mark, a restart will be allowed. This will only be allowed one time per vehicle. To qualify for this, the sled must be stopped before the 100 ft mark. Management will be the final judge on this.

23. The first puller in a class has the option to turn down a pull and re-hook as the last puller of the class.

24. Vehicles will be stopped as so judged by track officials based on when the vehicle stops moving forward.

25. Disqualification will result in the following circumstances:
    a. Safety issues, as described in these rules, are discovered before, during or after the pull.
    b. Driver does not remain in the vehicle with all safety requirements in place.
    c. Vehicle begins to move prior to being given approval by track officials to begin (green flag must be raised).
    d. Weights are found to not be securely fastened. If any ballast weight falls off the vehicle or touches the ground during the turn, the pull/vehicle will be disqualified.
    e. If the vehicle crosses any part of boundary lines that are in place. Boundaries will be clearly marked.

26. Starting place of the sled may be determined by each puller and can be modified by the driver moving the placement of the cone that sits behind the sled PRIOR to the previous puller being unhooked from the sled. Modifications to starting place will be honored as feasible with the sled driver making the final decision.

WW PROMOTIONS

27. Vehicle protests: Prior to the finalization of the event (i.e. prizes have been awarded), a protest can be raised on a vehicle based on the following:
    a. Protest fee is $500. If the vehicle is found to be legal, the driver is paid the protest fee. If the vehicle is found to NOT be legal, the protest fee will be returned to the protester.
    b. If the vehicle is found to be illegal, the driver AND the vehicle will be suspended for 1 year. Transfer of vehicle ownership does not release the suspension.

28. Compressed canisters are not permitted in any class/vehicle. These include, but are not limited to NOS, propane, and oxygen.

29. Consumption of alcoholic beverages is not permitted for any driver until they have completed their pull and the vehicle is parked by their trailer. Failing to comply will result in immediate disqualification for the night.

30. Drivers, including their crew members, are expected to conduct themselves in a sportsmanlike manner at all times during the event. Excessive arguing and any violence will result in the driver AND the vehicle being suspended for 1 year. Transfer of vehicle ownership does not release the suspension.

31. Vehicles must be free from profane and/or obscene images and words.

POINTS SYSTEM:

Points classes require a minimum of 3 vehicles participating in at least 50% of the pulls each year.

Hooking	=	5 points			
1st Place	=	10 points	6th Place	=	5 points
2nd Place	=	9 points	7th Place	=	4 points
3rd Place	=	8 points	8th Place	=	3 points
4th Place	=	7 points	9th Place	=	2 points
5th Place	=	6 points	10th Place	=	1 point

11th Place and beyond will only receive hooking points, if applicable.

Rain outs will award 5 points to each participant if the class has started.

Disqualifications will not receive any points.

DRAWBAR HEIGHT REQUIREMENTS:

4-WHEEL DRIVE = 26 INCHES
2-WHEEL DRIVE = 30 INCHES

LENGTH FROM CENTER OF REAR AXLES TO HITCHING POINT:

4-WHEEL DRIVE	=	36% OF WHEELBASE
2-WHEEL DRIVE	=	18″ MINIMUM
2-WHEEL DRIVE DOT	=	42″ MINIMUM

WW PROMOTIONS

SAFETY RULES

1. No person will be allowed to drive unless a Safety Certification Form has been completed for the current calendar year and they agree to follow the rules and requirements set forth herein.
2. All drivers will be required to wear the following:
    a. Fire jacket
    b. Fire pants
    c. Leather shoes or Racing shoes
    d. Helmet w/shield (DOT or SNELL rated)
    e. Face shield mask (recommended, but optional unless class rules require)
    f. Seatbelt/Harness (must be worn while pulling)
    g. Neck Brace
    h. Fire Gloves (recommended, but optional unless class rules require)
3. Fire extinguisher (2 ½ pound) is required to be mounted in the cab within reach of the driver.
4. Equipment requirements
    a. The following will not be allowed inside the cab of the vehicle.
        i. Fuel tanks/fuel pressure gauges/fuel lines
        ii. Battery-UNLESS it is enclosed and fastened
        iii. Radiators/hoses
5. WORKING KILL SWITCH is MANDATORY! Kill switch requirements discussed in General Truck Rules
6. Additional Safety Rules as described in the following pages.

WW PROMOTIONS

GENERAL VEHICLE RULES

1. Tires may be buffed but it must be done at a management approved location. Failure to do this may result in a 1 year suspension.

2. Hood must be opened for inspection.

3. Pumping: A class member may pump a member of class for $100.00 (Pump fee goes to the Association). Results will be given to member requesting pump. No disqualification. Vehicle will continue to compete unless found illegal by teardown. Top 5 vehicles can be pumped at board's descretion.

4. Drawbar must be equipped with a steel hitching device not less than 1″ by 1″ square (1″ round stock) and with a T round hole min. of 3 x 3 3/4 round hole.

5. Hitch point to rear axle center, line must be a minimum of 36% of wheelbase and a max of 26″ in height.

6. Hitch point must be secure to vehicle frame and rigid in all directions. No cables or chains allowed in hitch mounting. Movement of the hitch in any direction will not be allowed. CLASS RULES APPLY.

7. Cam type rear ends not allowed.

8. All drive line U joints to be enclosed in 360 degrees shield 1/16 inch thick steel or 1/8 inch aluminum. Shield should be rigid and close enough to joint to restrain any broken parts. Joint should not be seen from side, top or bottom.

9. Each drive shaft must have a minimum of (2) two loops. If vehicle has a shaft between transmission and transfer case no longer than 24 inches, one (1) loop, properly centered, will suffice. Two-piece shafts must have four (4) loops.

10. Loop location to be no less than six (6) inches and no more than twelve (12) inches on solid end of shaft and one (1) inch past stub on end with slip joint, or three (3) loops evenly spaced so that if slip joint breaks, shaft can not drop.

11. Loop material shall be of steel no less than ¾ inch wide ¼ inch thick, if aluminum, minimum 3/8 inch thick.

12. If original vehicle has side doors they need to be on and closed. Driver's door must be operational from inside and outside. Bumpers, tailgates, van rear doors are optional. Truck bodies may be fiberglass-complete body or body components.

13. All weights must be securely attached to vehicle. No loose ballast (sand bags, rocks, unattached metal, etc).

14. Dual wheels, chains, and studded tires are not allowed. Tires must have rubber or rubber compound contact between tire and pulling surface.

15. Front and back glass or plexiglass required. Tinted or shaded windows hindering

the driver's vision front or back will not be allowed.

16. Any truck with engine-driven fan blade is required to have fan shroud and should be no more than one (1) inch from radiator core and ½ inch past rear blade.

17. All pulling trucks must be required to have a steel billet flywheel. The flywheel must be made of steel with the following mechanical properties: Tensile strength of 60,000 PSI and yield strength of 40,000 PSI. Any aluminum or magnesium fly specs will be acceptable.

18. All trucks must be equipped with a steel bell housing (SFI approved) plus a block saver plate. A safety blanket is required on automatic transmissions.

19. Any type of metal shield to cover all axle bolts is mandatory and must be securely held in place.

20. All pullers under the age of 18 need to be certified with the board for approval. Certification must be before playday or any sanctioned pull. A parental consent form must be signed. NO EXCEPTIONS

21. **NO KILL SWITCH/NO PULL A working kill switch** and back-up light located in the rear on the bed in all classes. Kill Switch must have a zip tie. In the event your kill switch is pulled, and if the zip tie is broken, you can rehook, if the tie is **NOT** broken, you cannot rehook.

22. No Air-shocks/Air-bags

23. No flatbed, Diesels engines and no aluminum beds.

24. Must have working Front Brakes or working Drive line Brake at transfer case.

25. The back of engine block no closer than 14" (plus or minus .250") to center line of front axle.

26. Firewall must be original or of equal material strength. No open holes.

27. Must run pump gas or racing fuel. No alcohol except where class rules allow. No nitrous oxide.

28. Natural Aspirated Engine Only.

29. No aftermarket fuel injection systems.

30. Must maintain stock Wheel Base max – 133"

31. 1 Ton front end max. Can run any rear end.

32. Must run SFI approved harmonic balancer or must have shield.

33. No barred tires.

34. All Automatic Transmission Equipped Vehicles must have neutral/park safety start switch.

35. All Trucks must have an OEM appearing frame.

WW PROMOTIONS

CLASS RULES

General Vehicle Rules and Safety Rules will also apply for each class unless it is stated otherwise in that Class' Rules. By registering as a member, you are agreeing to follow these rules. If truck is found to be illegal based on these rules, it will not be allowed to pull for points or money until it has been corrected.

6200 DOT 2WD

1. All General Vehicle Rules and Safety Rules will also apply unless stated otherwise in these class rules.
2. 6200 lb weight limit with 1% tolerance.
3. 140" wheel base, weights not to exceed 15 ft.
4. 15 ft center rear to farthest point.
5. Aftermarket transmissions not allowed. OEM transmissions & no cut gears.
6. Aluminum or cast iron conventional heads only.
7. 14 inches from center of front of bell housing.
8. Single carburetor, sheet metal intakes not allowed.
9. Planetary rear ends not allowed.
10. DOT approved tires not larger than 35 x 12.5 x 15 max.
11. Weights may be adjusted after crossing the scales.
12. Max weight & hitch-ALL TRUCKS PULL MAXIMUM 30" HITCH
13. Can run alcohol, but must wear full fire suit including jacket, pants, face shield mask, gloves, boots and helmet with shield. All must meet minimum requirements as shown in the Safety Rules section.

WW PROMOTIONS

6200 PRO STOCK 4WD

1. All General Vehicle Rules and Safety Rules will also apply unless stated otherwise in these class rules.

2. 6200 lb weight limit with 1% tolerance.

3. 485 cubic inch max

4. Street legal DOT tires not larger than 33″ tall and 12.5″ wide or 305R tire size. Front tires cannot track past center of rear tires and vice versa. See General Vehicle Rules #1 for additional tire requirements.

5. Body must retain original location, body lifts not permitted.

6. A Single four-barrel manifold is allowed.

7. Headers are not permitted to turn down. They mush be straight up and out of the hood or down and back.

8. Any cut out beds must be covered.

9. Any type of transfer case is allowed.

10. Hoods are required. A hole may be made for headers and breathers, however holes for breathers must be 16 inches or with any head scoop.

11. Any heads are acceptable except Hemi heads.

12. All trucks to have side shields from frame to bottom of head.

13. Weight bar not to exceed 60″ from center line of front axle.

WW PROMOTIONS

6200 PRO STREET

1. All General Vehicle Rules and Safety Rules will also apply unless stated otherwise in these class rules.

2. 6200 lb weight limit with 1% tolerance.

3. 473 cubic inch max with 1% tolerance.

4. Vehicles limited to 1 1-piece carburetor.

5. Only Factory Production Cast Iron OEM heads allowed and should have the factory Casting numbers in the factory location. Hemi heads, aluminum heads and aftermarket cast iron heads are NOT allowed.

6. Frame and body must appear stock.

7. Any cut out beds must be covered.

8. Bumpers must be aesthetic to body.

9. Solid rear suspension is allowed; rear axle must be solidly attached.

10. No weights beyond factory front bumper.

11. Street legal DOT tires not larger than 33″ tall and 12.5″ wide or 305R tire size. Front tires cannot track past center of rear tires and vice versa. See General Vehicle Rules #1 for additional tire requirements.

12. OEM type transfer case required.

WW PROMOTIONS

6200 SUPER STREET TRUCKS

1. All General Vehicle Rules and Safety Rules will also apply unless stated otherwise in these class rules.

2. 6200 lb weight limit with 1% tolerance.

3. 468 cubic inch max, small blocks are limited to 383 cubic inch max.

4. OEM iron cylinder heads. Hemi heads are not allowed.

5. Back of engine block to be no closer than 14″ behind center line of front axle, +/- ¼″.

6. A single carburetor limited to a 4150 style flange. 4150 base 4 barrel carburetor max.

7. No fuel injection systems.

8. No dry sump oil systems.

9. No rear shocks.

10. Factory OEM cast iron intake including casting numbers. Spacer may be used to adapt the intake to tall deck blocks. 2″ maximum spacer/adapter from carburetor to intake, plus two 1/4″ gaskets. Aluminum intakes not allowed.

11. Headers are allowed as long as exhaust exits at rear of cab.

12. Blocked rear suspensions, traction bars, chains, cables or devices on front (other than OEM) are not allowed. One vertical bolt on rear springs is allowed. Chains are allowed on rear.

13. Shackles or spring hangers must be in place and functional. Blocks on frame or shackles to limit suspension system travel are not allowed. Clamped springs are allowed as long as clamps are not longer than 3″, and no more than 4 clamps per side.

14. Bumper or a draw bar style hitch is permitted. If pulling from rear bumper, the bumper must be mounted to rear of stock frames. Bracing from center of bumper to frame rail is permitted, but cannot extend further than 24″ forward from the end of the frame. Pulling hitch must be mounted to the bumper. Twisted clevis or similar devices are permitted (horizontal L hole). Hitch not to exceed 26″ in height and at least 36% of the wheel base from the center of rear axle. 36% of the maximum allowable wheelbase (133″) is 47.88. Hitch bracket shall extend not more than 2″ above the frame rail at attachment point. Hitch brackets must

WW PROMOTIONS

be constructed of 2″ x 2″ x ¼″ metal. Forward edge of hitch brackets shall not extend any further than 24″ forward of hitch point. See picture:

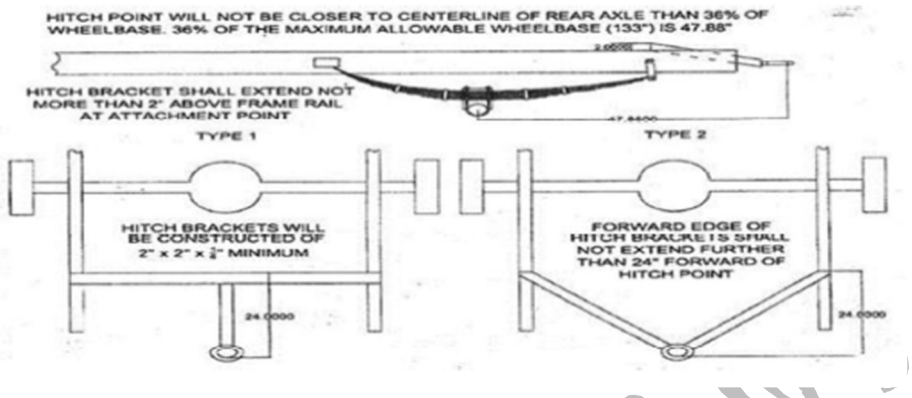

15. No visible weights beyond factory bumper in factory position. Weights may hang 6″ below bumper and covered by a 6″ air dam. Bottom of weights must be a minimum of 8″ above ground.

16. Fiberglass bodies are not allowed. Body must appear to be stock. Front bumper must be in stock location. Air dam is allowed 6″ below front bumper.

17. Cut out beds are not permitted.

18. Trucks must have complete body, but tailgate is not required.

19. Front tires cannot track past center of rear tires or vice versa.

20. OEM transfer case and axles are limited to a 1ton max. No other style rear end is allowed.

21. Tire size is limited to DOT 33 x 12.5 or 305/70.

22. All trucks limited to a 133″ wheel base.

23. Small block motors will be able to run aluminum dual plant intakes, no air gap style and no external modifications. Small block motors can only run OEM cast iron heads and an OEM cast iron block. Aluminum heads and blocks are not permitted.

24. Trucks with engine driven fan blade are required to have a metal fan shroud that should be no more than 1″ from radiator core and ½″ past the rear blade.

WW PROMOTIONS

HOT STOCK

1. All General Vehicle Rules and Safety Rules will also apply unless stated otherwise in these class rules.

2. 468 cubic inch max.

3. 6200 lb weight limit with 1% tolerance.

4. A single carburetor limited to a 4150 style flange.

5. No visible weights.

6. Factory OEM cast iron intake and factory aluminum intake for year of vehicle or factory installed fuel injection with factory aluminum intake. No added material. No adapter may have 1″ spacer plate with 2 paper thin gaskets.

7. Factory production cast iron OEM heads including factory casting numbers in factory location. Hemi heads and aluminum heads are not allowed.

8. Blocked suspension or traction bars are not permitted. One vertical bolt in springs is allowed and may have 4 clamps per side.

9. OEM transfer case and axles with a 1 ton max rear end. No other style rear end is allowed.

10. All shackles must be in stock location and fully functional. Blocks and welded springs are not permitted. Nine total factory springs with a limit of 2 rear shocks in factory position. Shocks cannot be solid or welded.

11. Hitch point will be closer to centerline of real axle at 36% of wheel base 36% of the maximum allowable wheel base (133″) is 47.88. See Picture:

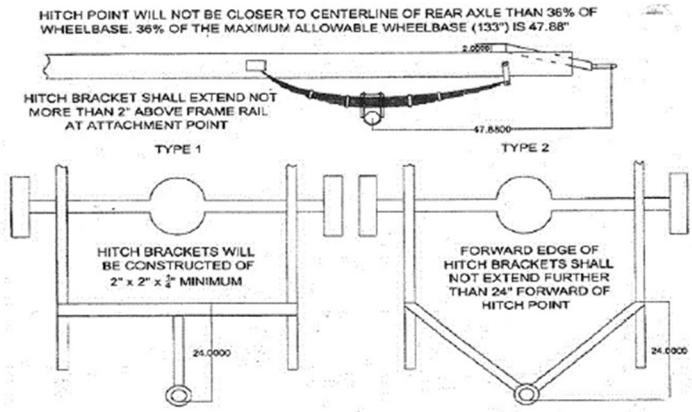

WWPROMOTIONS

12. Trucks must have complete body, but tailgate is not required.

13. Fiberglass bodies are not allowed. Body must appear to be stock. Front bumper must be in stock location. Air dam is allowed 6″ below front bumper.

14. Cut out beds are not permitted.

15. Full interior in cab including seat (or racing seat), dash, door panels and factory glass.

16. No straight pipes or headers. Cast iron exhaust only. Exhaust must run through mufflers and must exit 1′ rear of cab.

17. Engine must be able to pull 16″ of manifold vacuum or more, at 800 rpm. Vacuum pumps are not permitted. RPM′s to be checked with a digital tach meter. Must make vacuum hose easily accessible and mounted to driver′s side inside fender well. Vacuum hoses must be no larger than 1/8″ in diameter and no longer than 6′.

18. Street legal DOT tires not larger than 33″ tall and 12.5″ wide or 305R tire size. Front tires cannot track past center of rear tires and vice versa. See General Vehicle Rules #1 for additional tire requirements.

19. No brush or grill guard.

20. Can run headers with flat tappet cam. Must pull 14″ of vacuum at 1000 RPM′s.

21. Motor mounts are to be in the stock position for the make and model of the truck.

WW PROMOTIONS

PRO STOCK 2WD

1. All General Vehicle Rules and Safety Rules will also apply unless stated otherwise in these class rules.

2. 30″ maximum hitch height

3. 540 cubic inch (Over 540 cubic inch must lower hitch to 28″)

4. Tire size is limited to a maximum of 18.4 x 16.1.

5. 6200 lb weight limit with 1% tolerance.

6. 2 Carburetors are allowed. Must be naturally aspirated. Fuel injection is allowed.

7. Can run alcohol, but must wear full fire suit including jacket, pants, face shield mask, gloves, boots and helmet with shield. All must meet minimum requirements as shown in the Safety Rules section.

8. Truck maximum length is 15 ½′ from center of real axle to the most forward position of the truck. No weight further than 15′.

WW PROMOTIONS

SMALL BLOCK SUPER STOCK 4WD

1. All General Vehicle Rules and Safety Rules will also apply unless stated otherwise in these class rules.

2. 6200 lb weight limit with 1% tolerance.

3. 430 cubic inch max with 1% tolerance.

4. All blocks must be cast iron with standard bore spacing and standard deck height.

5. No LS or late model style engines with overhead cams allowed.

6. Aftermarket blocks allowed but no aluminum blocks permitted.

7. No FE style blocks allowed.

8. The following blocks are acceptable:
    a. Chevy small block (including the small 400)
    b. Dodge small block 318/360
    c. Ford Windsor 302/351 / Cleveland 351 & 400M

9. Any OEM or aftermarket heads made of cast iron or aluminum made from the blocks listed in #7.

10. Any intake manifold that will fit these heads are allowed, including spacers used to mount a Cleveland intake to the Cleveland style heads on the 400M Ford.

11. Any single carburetor but fuel injection is not allowed.

12. Any ignition system, mad or electronic box is permitted.

13. Can run alcohol, but must wear full fire suit including jacket, pants, face shield mask, gloves, boots and helmet with shield. All must meet minimum requirements as shown in the Safety Rules section.

WW PROMOTIONS

STOCK 2WD

1. All General Vehicle Rules and Safety Rules will also apply unless stated otherwise in these class rules.
2. 5800 lb weight limit with 1% tolerance.
3. 472 cubic inch max with 1% tolerance.
4. 14 lbs vacuum at 1000 RPM.
5. 135″ wheel base.
6. 1 ton rear end max.
7. Leaf springs in factory location with 1″ movement.
8. 4150 series carburetor, can be run with a 1″ spacer.
9. No tire wider than 12.50″
10. Tire size limited to a maximum of 35″-12.50″-15″.
11. Weight bars not allowed on front.
12. Front suspension must be in factory location, it cannot be moved; straight axles not allowed.
13. Radiator must be in factory location.
14. Cast iron OEM heads only with factory numbers on it. No Aluminum heads.
15. Cast iron factory intakes with factory numbers on it. No Aluminum intakes.
16. Cast iron factory exhaust manifolds, no headers. Exhaust must exit behind cab.
17. All U-joints to be covered.
18. Steel bell housing, must be SFI approved.
19. Steel fly wheel, must be SFI approved.
20. Minimum of 2 drive line loops
21. 5500 lb weight limit.
22. Hitch to be no shorter than 42″ from center of rear end. Maximum height is 30″.
23. Factory transmission only.

WW PROMOTIONS

DIESEL 4WD

1. All General Vehicle Rules and Safety Rules will also apply unless stated otherwise in these class rules.

2. 460 cubic inch maximum

3. 8000 lb weight limit with 1% tolerance.

4. OEM Chassis is mandatory. The vehicle must retain the full OEM chassis. Wheel tubs, back half conversions, and tube chassis are prohibited. Must retain factory OEM wheel base for make and model of body, not to exceed 158″.

5. Body must be OEM truck body including the full bed floor. Flatbeds are not allowed. The body must retain the full sheet metal. Aftermarket hoods are permitted. The hood must be closed and securely latched when hooked to sled.

6. Complete engine must have stock appearance except where otherwise noted in these rules. Engine must be in OEM location for the body to be used. Engine must have a 3/8″ diameter cable surrounding the engine block. Cable is to be positioned between #1 and #2 cylinders and is to pass through manifolds. Cable will have 4-6″ of slack. Two cable clamps required at cable splice.

7. Cylinder head must be OEM or OEM replica for brand of engine. Outside of cylinder head must measure factory widt and length. No billet heads of any material. Head must retain factory OEM valve angle. No deck plates are allowed.

8. Hook point to be no closer than 44″ of centerline of rear axle. Maximum hitch height is 24″ with a minimum of 3.75″x3″ opening. Hitch must be stationary in all directions and frame mounted. Reese style hitches are not allowed. Hitch cannot exceed 25 degree angle from pivot point to hook point. No hitch supports or adjusters fastened to rear axle housing shall be above center point of rear axle. Pivot pin of drawbar can be no further forward than the centerline of rear axle.

9. Turbo is limited to 2.6″ inducer bore. Bore must be smooth. No MAP Width Enhancement groove allowed. Compressor wheel must protrude into one 2.6″ bore for 1/8″. Bore will be checked with a 2.605″ turbo plug.

10. All vehicles must be equipped with upward pointing exhaust located either directly behind cab or out of truck hood. Two 3/8″ diameter bolts must be placed through the exhaust pipe in a cross pattern within 1″ of each other and within 12″ of turbo.

WWPRODUCTIONS

11. Front hanging weights are allowed, but are not to exceed 60″ forward from the centerline of front axle. Ballast may be added in the bed of truck but must be securely fastened.

12. All trucks must have at least 6″ wide u-joint shield around the rear u-joint constructed of at least 5/16″ steel or 3/8″ aluminum that will safely contain the u-joint and the end of the driveshaft. All shields must be securely mounted to vehicle. Any front shaft u-joints that can be visibly seen from side of truck must be shielded to contain the u-joint and the end of the driveshaft.

13. Fire extinguisher (2 ½ pound) is required to be mounted in the cab within reach of the driver. A complete OEM firewall is required.

14. All drivers must have a valid driver's license and must wear a full fire suit including jacket, pants, face shield mask, gloves, boots and helmet with shield. All must meet minimum requirements as shown in the Safety Rules section.

15. Seatbelt/restraint must be worn.

16. The complete OEM floor pan is mandatory. Vehicle must maintain a complete firewall. Additional gauges and pillar pods are permitted.

17. Hand throttles permitted.

18. Diesel fuel only. Propane, NO2 or any other oxygen enhancers are not allowed.

19. Maximum of one P pump up to P1700 allowed. 13MM plunger limit. Ag governors are permitted. The use of multiple high pressure common rail fuel pumps is legal.

20. OEM rear and front ends required and must have come from the factory in a one ton or smaller vehicle.

21. Axle shields are required. Shield to be .060″ thickness steel or aluminum. A hole may be cut in one shield to allow operation of hub lock.

22. Safety switch (rain cap or guillotine) must shut off air to diesel engines. Switch will be securely mounted to back of vehicle. A 2″ or bigger solid ring must be attached to end fo switch. Ring must be zip tied to switch bracket. Switch must be able to be activated in cab while driver is secured in vehicle.

23. Hydraulic steering permitted.

24. Rear suspension-The upper mounting point for strut assembly must be in factory location. Adjustable caster/camber pillow ball mounts are permitted. The lower control arm may be strengthened provided the factory mounting points are maintained. Strut tower braces, lower tie bars, sway bars, and limit straps are permitted. Traction bars and devices are permitted. Raising or lowering of vehicle height with suspension modifications is permitted but must be bolt on only. Welds

WW PROMOTIONS

permitted but must be bolt on only. Welds permitted for attachment to frame and axle only. Blocked suspension permitted. No air bags. Rear suspension may be made solid.

25. 3-way dump valve required and must be able to be pulled from driver's seat.

26. Tires must be DOT approved with maximum size of 35x12.50. Studded tires and tire chains are not permitted. No alterations to tires allowed. No bar or terra tires.

27. Dual wheels are prohibited.

28. OEM transmission and transfer case must be used and must come from factory in a one ton or smaller vehicle.

29. Non-OEM transmissions are prohibited, however aftermarket torque converters, valve bodies, and internal components are permitted.

30. SFI bell housing and/or SFI blow proof bell housing or SFI blanket type shield must be used.

31. Water injection is prohibited.

32. Air to air intercooler only. No cooling device allowed for intercooler. No ice boxes.

WW PROMOTIONS

HOMETOWN CLASS - GAS

1. Trucks must be street legal; licensed, tagged and insured.
2. 6200lb weight limit with 1% tolerance.
3. Bumper or Reese hitch-26".
4. Factory fuel injection or carburetor.
5. No visible weights.
6. No race fuels or power adders.

WW PROMOTIONS